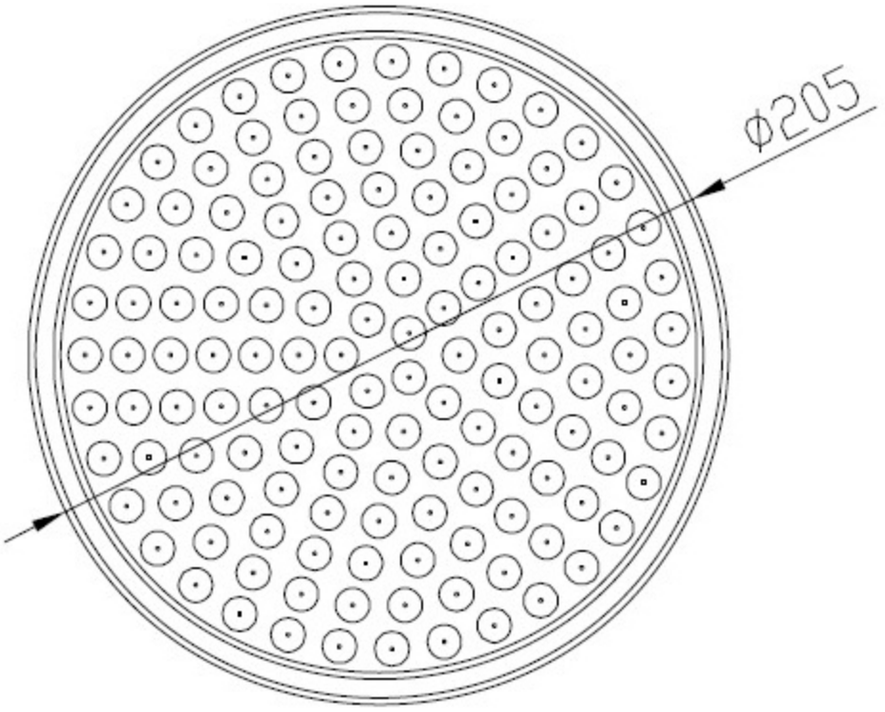
Ø205

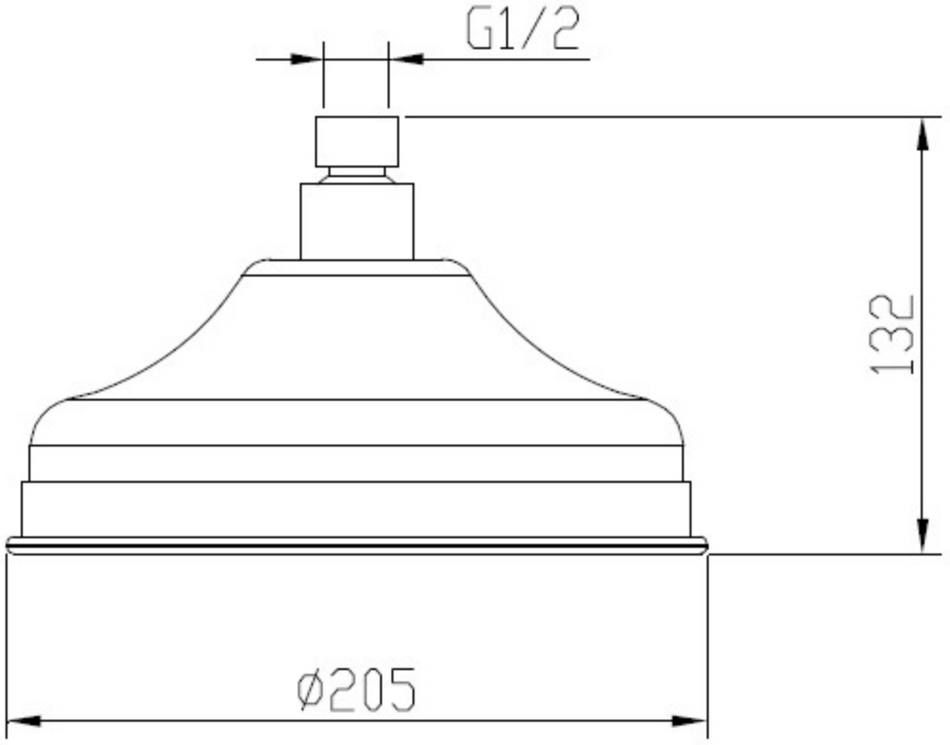
G1/2
132
Ø205

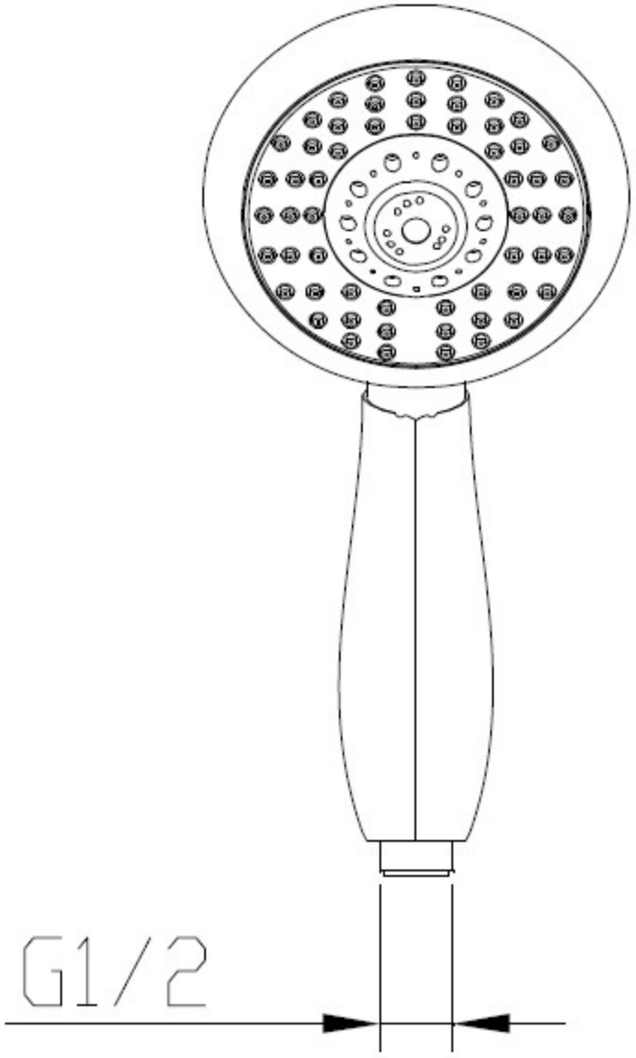
G1/2

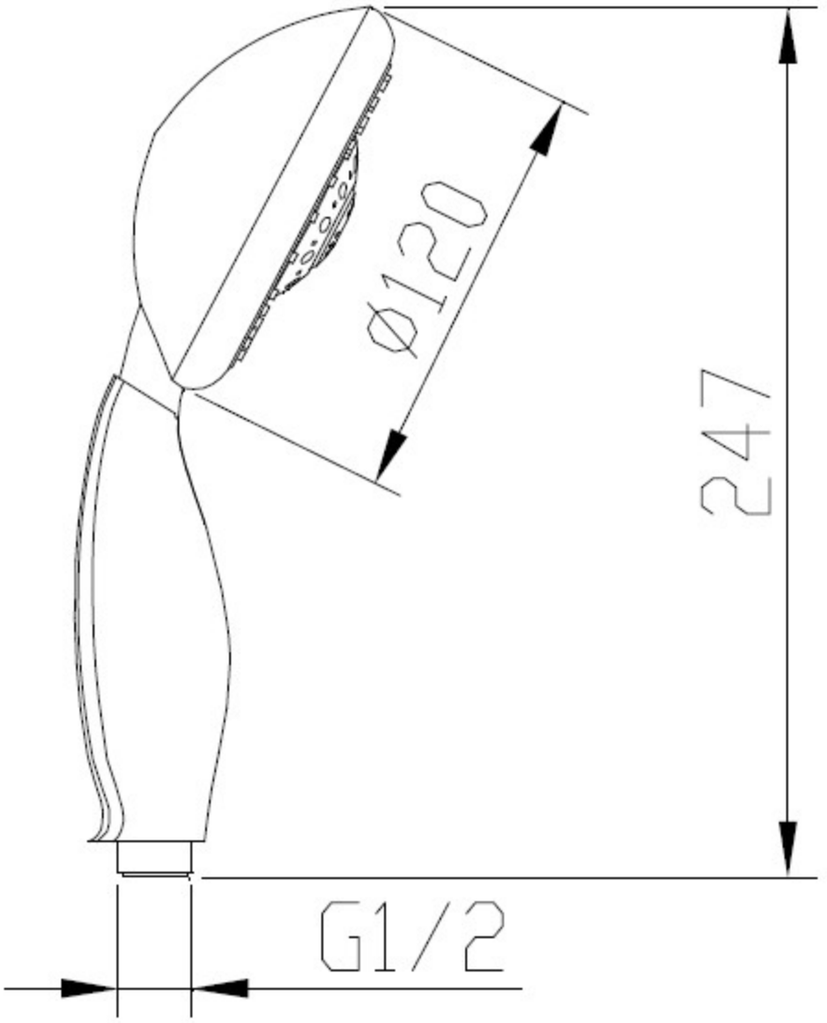
Ø120
247
G1/2

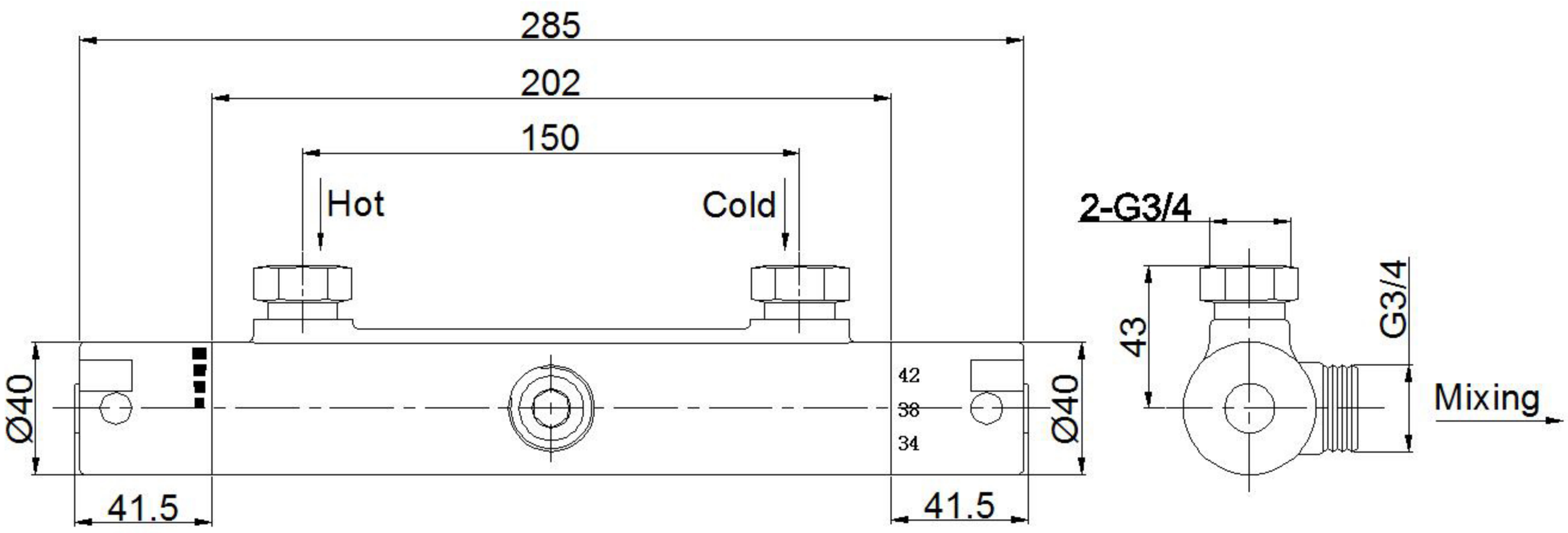
285
202
150
Hot
Cold
2-G3/4
43
G3/4
Mixing
Ø40
42
38
34
Ø40
41.5
41.5

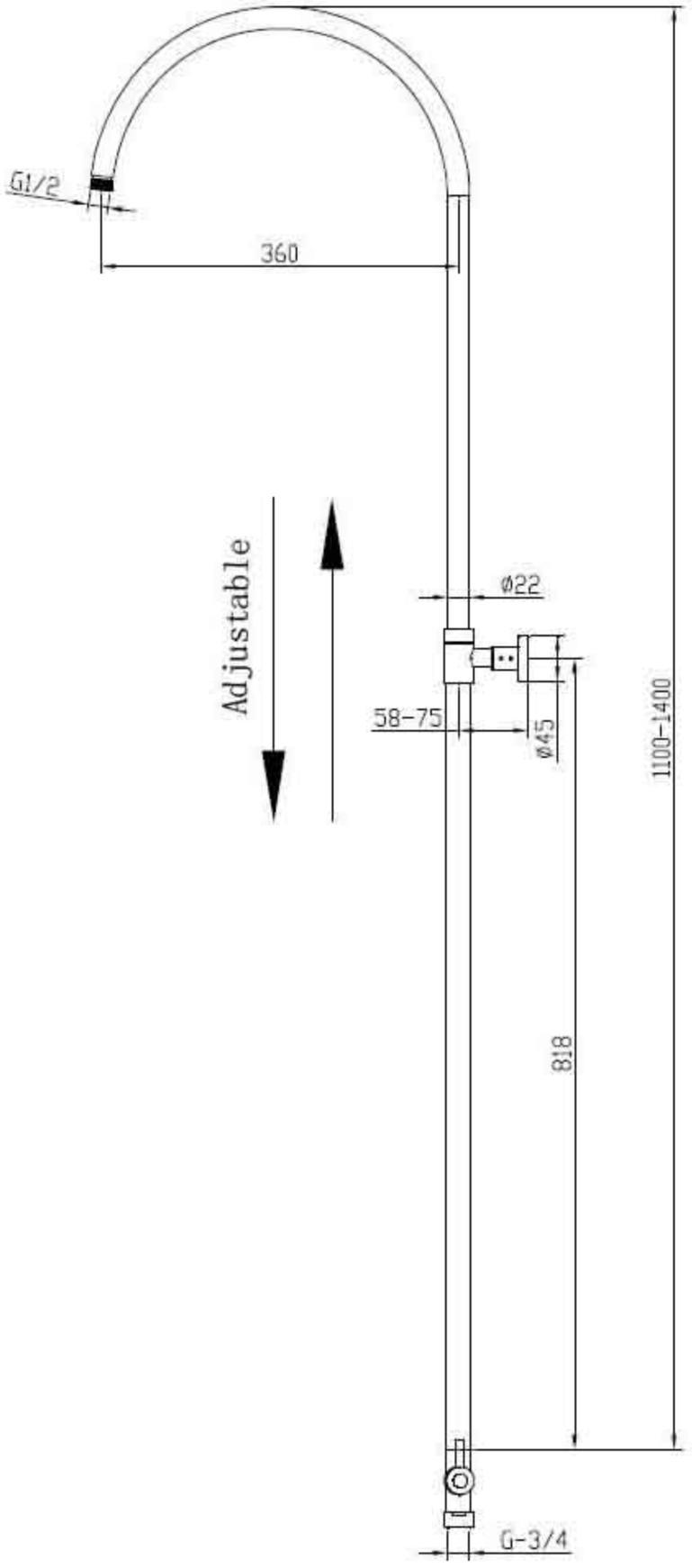
G1/2
360
Adjustable
Ø22
58-75
Ø45
1100-1400
818
G-3/4

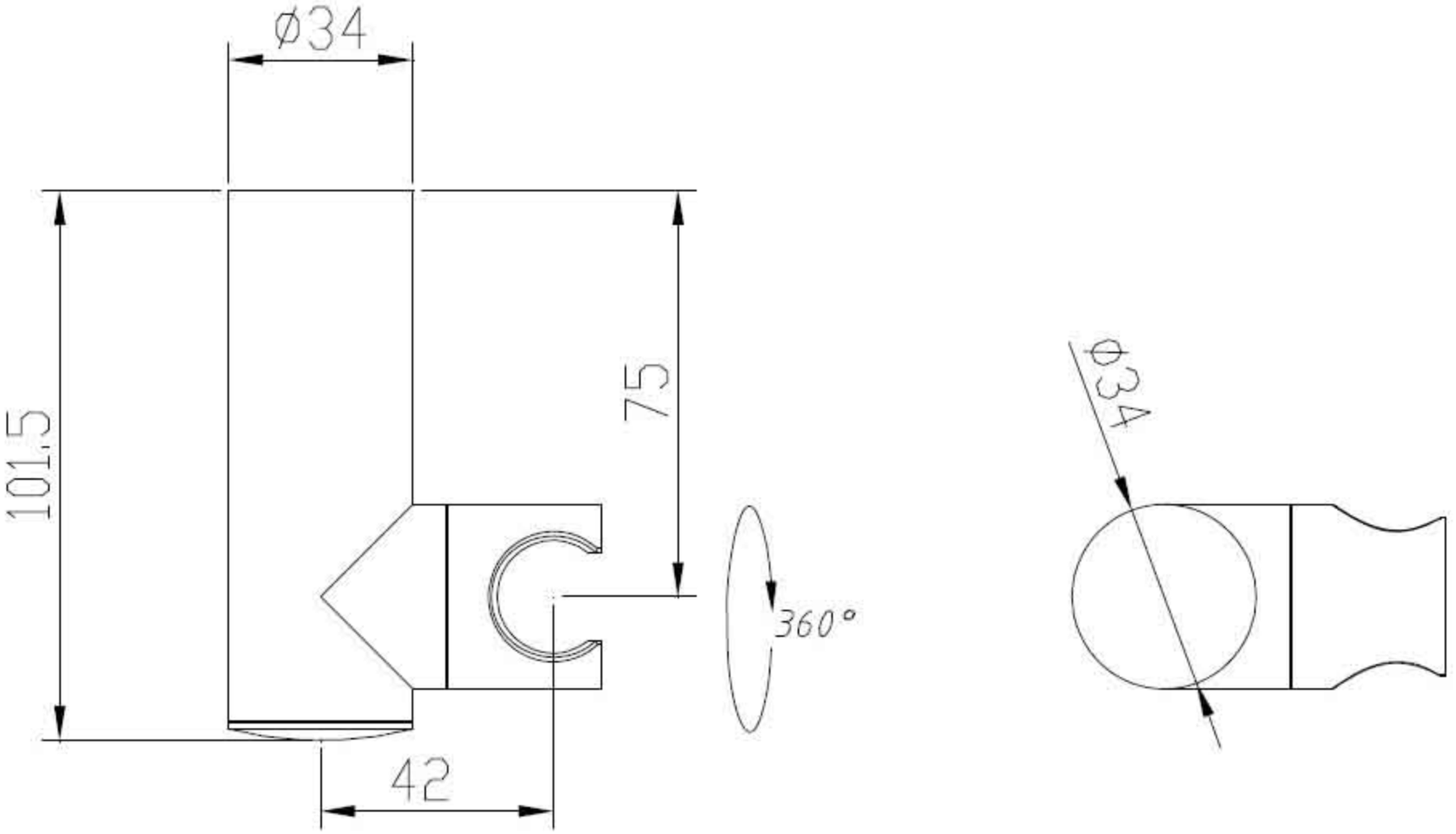
Ø34
101,5
75
360°
42
Ø34