SE01TR01

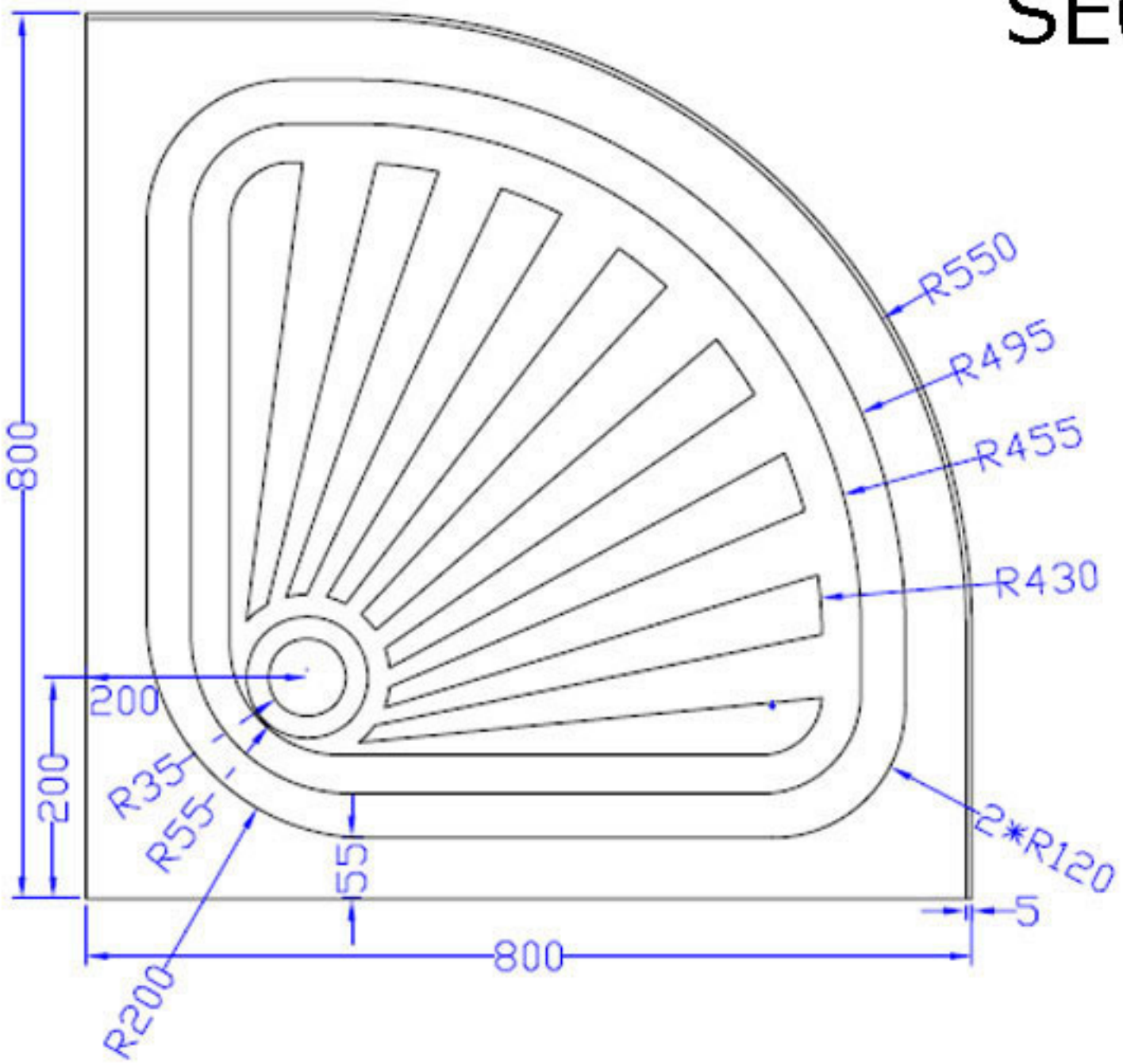

Top

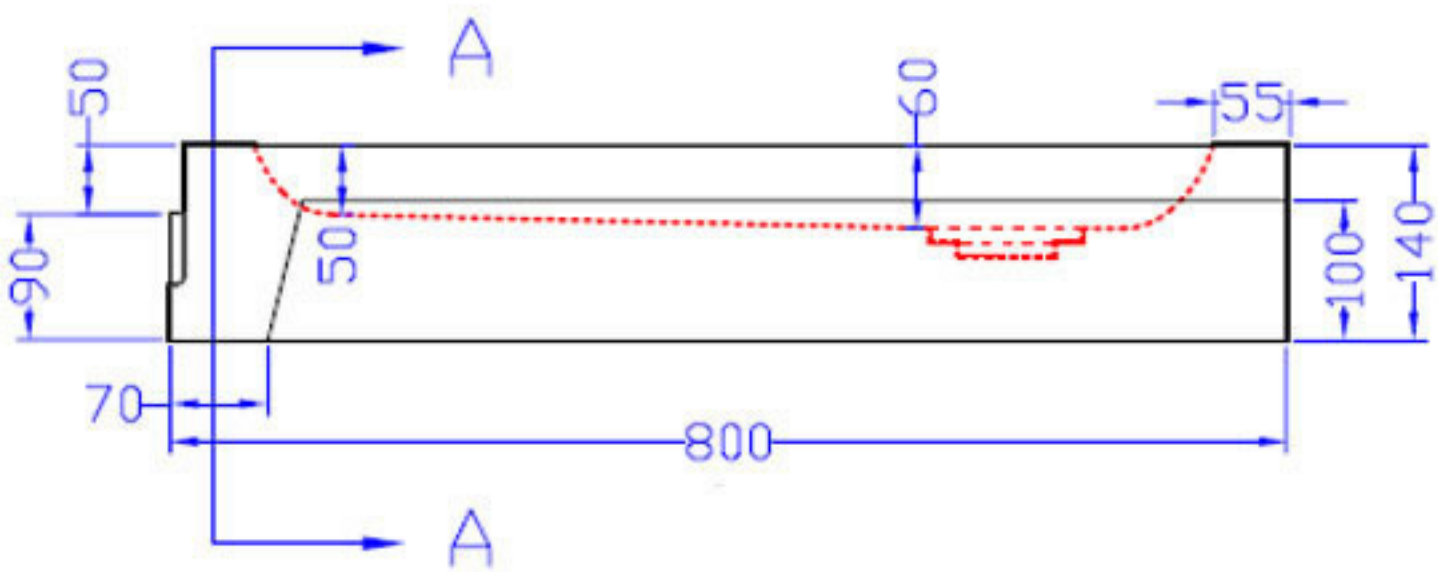

Left

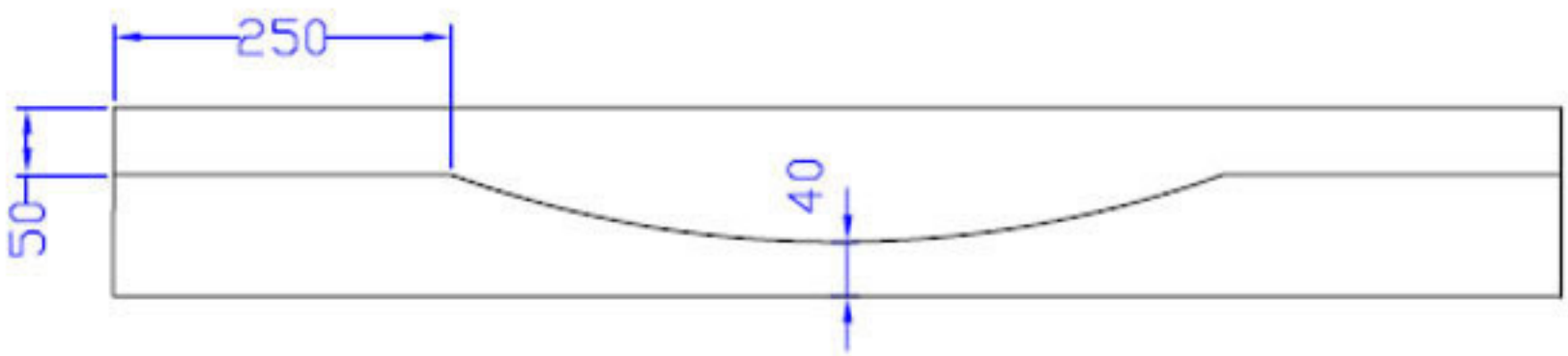

A – A Sectional drawing